SENKO
cookers and fireplaces

INSTRUCTION MANUAL

Central heating FIREPLACES

Central 20-25 kW, Central 30-35 kW

SN-EN-08/13

Dear client, thank you for choosing a SENKO fireplace !

This product was designed and manufactured to its minutest details in order to fulfill your every need for functionality and safety.

This *Instruction manual* will teach you to operate your fireplace properly, so please read the manual carefully before using the fireplace.

Senko management

Symbols used in this *INSTRUCTION MANUAL* :

- ATTENTION
- WARNING
- SAFETY
- ADVICE AND RECOMMENDATIONS

CONTENTS

1. GENERAL 4
1.1. FUEL 5
1.2. FEEDING 5
1.3. CHIMNEY 6
1.3.1. CHIMNEY CAP 6
1.3.2. CHIMNEY FUNCTION 8
1.4. INSULATION 10
2. WARNINGS AND SAFETY 10
3. TECHNICAL FEATURES 11
4. INSTALLATION 14
4.1. POSITIONING 14
4.2. CHIMNEY PREPARATION AND CONTROL 16
4.3. CONNECTING TO CHIMNEY....16
4.4. FRESH AIR VENTS....18
4.5. CENTRAL HEATING SYSTEM CONNECTION 18
4.5.1. FIREPLACE THERMAL PROTECTION 20
4.5.1.1. Thermal two-way safety valve....21
4.5.1.2. Thermal safety valve 22
4.5.1.3. Anti-freezing protection 23
4.5.1.4. Heat exchanger 24
4.5.2. INSTALLATION TESTING 25
4.5.3. RECEIVING AND MAINTAINING THE INSTALLATION 25
4.6. FIREPLACE LINING 26
4.6.1. LININGS 26
4.6.2. AIR VENTS 26
4.6.3. DECORATIVE BEAMS 26
4.6.4. FIRE PROTECTION 26
5. HANDLING THE PRODUCT 28

5.1. AIR ADJUSTMENT AND REGULATION....28
5.2. FIRING 29
5.2.1. PROCEDURE 29
5.2.2. OPTIMUM USE VALUES 29
5.2.3. ADDING FUEL 30
5.2.4. FEEDING IN TRANSITION PERIOD 31
5.2.5. SPACE HEATING....31
6. CLEANING 32
6.1. GLASS CLEANING 32
6.2. ASH CLEANING 33
6.3. CHIMNEY CLEANING 33
7. MAINTENANCE 34
7.1. FIREBOX MAINTENANCE 34
7.2. MAINTENANCE DURING SUMMER 34
7.3. AUTOMATIC REGULATOR....34
7.4. OLD FIREPLACE DISPOSAL....36
7.5. SPARE PARTS....36
8. MALFUNCTIONS / CAUSES / SOLUTIONS 36
9. TECHNICAL SUPPORT 38
10. TECHNICAL DATA 39
11. TERMS OF WARRANTY 40
WARRANTY 41
INSTALLATION REPORT 42
CE MARKING 43

1. GENERAL

Solid fuel central heating fireplaces with glass door

- **E2284 Central 20-25 kW**
- **E2285 Central 30-35 kW**

are models from the SENKO fireplaces palette which can accommodate your needs in the best possible way. Therefore, we ask you to CAREFULLY READ THESE INSTRUCTIONS, which will help you to achieve the best possible results already during the initial use.

The manufacturer is not responsible for any consequences (people or animal injuries or property damages) **resulting from failure to comply with this *Manual*.** The fireplace is hot during operation and **the use of protective heat insulated gloves is compulsory during handling**. Children and infirm individuals are not allowed to handle the fireplace.

The external appearance of the fireplace is shown on the first page of this Manual. Fireplace principal parts are made of qualitative boiler sheets and castings of quality grey cast. The fireplaces are produced with flue gas connection point in the middle of the dome facing up. **When ordering the fireplace or the spare parts, it is necessary to state its full designation**, for example: fireplace E2284 Central 20-25 kW. The fireplaces are manufactured and certified in accordance with the EN 13229 standard and comply with all the requirements set by this standard

SENKO fireplaces are intended **for space heating and central heating**!

The fireplace is packaged in a EURO pallet. During transport, the fireplace must be properly fastened in order to prevent tumbling or damages. **The standard delivered fireplace set consists from**:

- fireplace with door,

- CF agent for removal of soot and grease from glass surfaces,
- dome with a chimney excerpt and pipes for space heating excerpt,
- instruction manual.

CAUTION! The fireplace weighs between 130 and 250 kg. Extra caution is necessary when unloading, transferring, moving and installing the fireplace in order to avoid physical injury.

1.1. FUEL

The use of moist and low-calorie wood is not recommended. The **wood moisture must be lesser than 17%.** The energy content of moist wood is low, at approx. 2,3 kWh/kg and it greatly pollutes the door glass, as well as the chimney and the fireplace.

Use only recommended fuel :

- **wood**: common beech, common hornbeam, oak, black locust
  ⇒ air dried for a minimum of 2 years
  ⇒ relative humidity 15-17%, energy content at approx. 4,2 kWh/kg
- **wood briquettes**: energy content at approx. 4,4 kWh/kg

1.2. FEEDING

- manually when necessary
- we recommend the **logs** to be of 50 x 50 mm **vertical cut**, up to 2/3 of the firebox length
- **the minimum distance between the logs** must be 1 cm, the same distance of 1 cm applies for the briquettes
- use smaller logs for a more intensive fire
- it is **necessary to use protective heat insulated gloves** when adding fuel to the firebox
- protective heat insulated gloves must also be used when opening and closing firebox door and removing ash box.

1.3. CHIMNEY

The fireplace is connected to the chimney via **standard 200 mm diameter smoke venting pipe**, directly to the chimney or with the knee 45° and extension pipe. It is necessary to execute the connection of the rosette and the chimney tightly and impermeably. If the fireplace is separated from the chimney opening, the extension **smoke inlet pipe must have an appropriate incline and must not exceed 125 cm in length.**

It is necessary to **leave the revision opening for chimney cleaning**, connecting pipe and dome of soot. It is also necessary that the connection elbow has the revision opening for cleaning on it.

We also advise **to equip the chimney with solid material and possible condensation products collection chamber** and to install the chamber in question beneath the smoke channel inlet, in a manner which allows easy access and inspection via impermeable door.

1.3.1. CHIMNEY CAP

Chimney cap must fulfill the following prerequisites:

- **identical internal cross-section** to that of the chimney,
- operational **exit cross-section no less than the double inner cross-section of the chimney**,
- constructed **to prevent rain, snow, leaves and other foreign bodies from entering** the chimney,
- constructed **to enable expulsion of combustion products in case of wind** from any direction and incline,

- installed **to enable proper dispersion and dilution of combustion products outside the reflux zone** (backflow) because the counter pressure occurs here. Therefore, it is necessary to adhere to limitations listed in *figure 1*,
- **mechanical appliances for flue gases suction are not allowed.**

FLAT ROOF

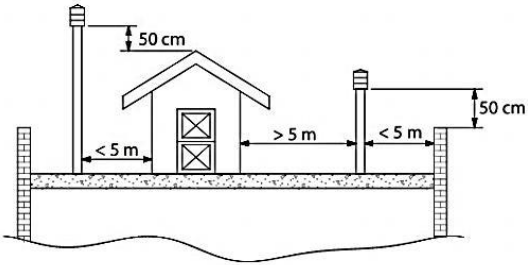

PITCHED ROOF

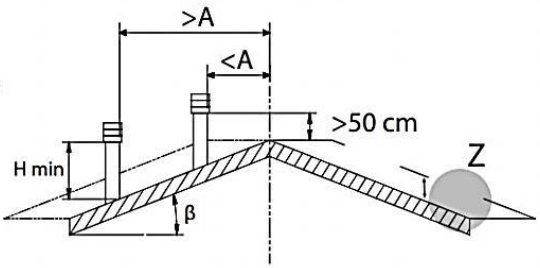

figure 1

Z=REFLUX ZONE

Roof slope	Distance between the roof ridge and the chimney	Minimum chimney height (measured from the roof surface)
β	***A*, m**	**H_{min}, m**
15°	< 1,85	0,5 m above the roof ridge
	> 1,85	1 m from the roof
30°	< 1,5	0,5 m above the roof ridge
	> 1,5	1,3 m from the roof
45°	< 1,3	0,5 m above the roof ridge
	> 1,3	2 m from the roof
60°	< 1,2	0,5 m above the roof ridge
	> 1,2	2,6 m from the roof

1.3.2. CHIMNEY FUNCTION

Among all the meteorological and geographical factors that influence the chimney function (rain, fog, snow, insolation period, etc.) **the wind is most certainly the crucial one**. Apart from the pressure caused by the temperature difference between the flue gases and the outer chimney air, there is another type of pressure – **wind dynamic pressure.**

Ascending wind ALWAYS has the **effect of increasing the pressure**, i.e., **underpressure (flue draught)**, provided the chimney is properly installed. **Descending wind** ALWAYS has the **effect of decreasing the draught** ⇒ overpressure occurs. Apart from wind direction and velocity, chimney position in relation to the house roof and surrounding area is also important (*figure 2*).

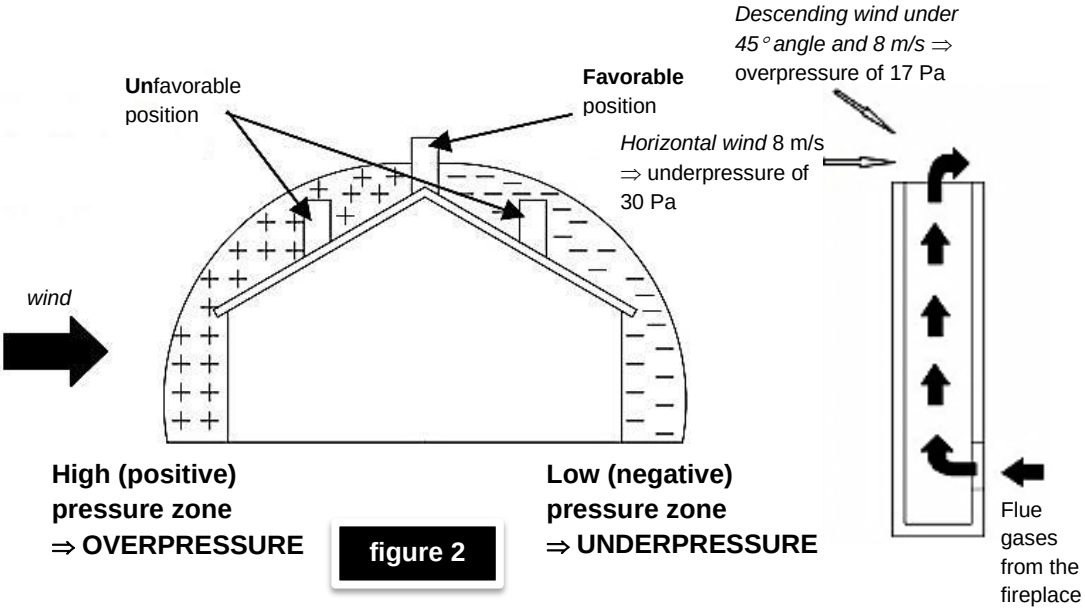

figure 2

The wind also influences the chimney function indirectly by creating areas of high (overpressure) and low (underpressure) pressure, both inside and outside the residential area (*figure 3*).

Pressure that facilitates chimney function can occur in rooms directly exposed to the wind (B), but it can also adversely affect the chimney through external pressure if the chimney is situated on the side exposed to wind (A). Contrary to that, underpressure can occur in lee rooms (C), adversely affecting functions of the chimney situated on the opposite side (D) from the wind direction.

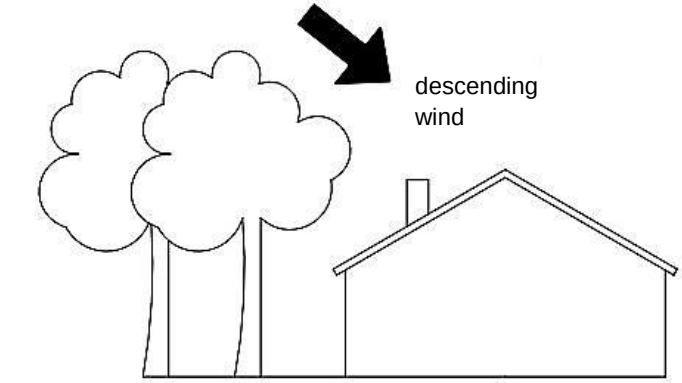

figure 3

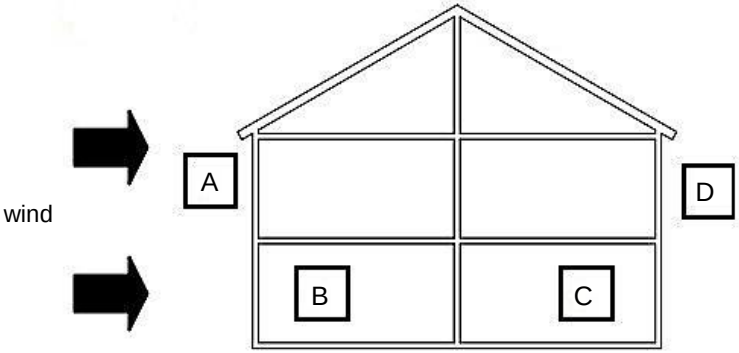

A-B zones in overpressure
C-D zones in underpressure

1.4. INSULATION

The fireplace has to be insulated in the boiler area by **at least 100 mm thick stone wool**.

2. WARNINGS AND SAFETY

When installing a fireplace, certain national and European regulations have to be considered. Before starting using a fireplace, consult a chimney-sweeper **if your fireplace is attached to the chimney in accordance with the regulations** (the chimney-sweeper has to fill out the installation report at the end of this manual).

A fireplace can be mounted only in rooms and in places where there can be no risk caused by it or its position, construction circumstances or the way of using it. Any electrical or gas installation in walls or ceiling near the coating of the fireplace is forbidden. Special requirement for the room with the fireplace is enough air in the room, so that there is enough air for a good combustion.

A fireplace shall not be mounted in the following places:

- staircase (allowed in apartment buildings with less than two apartments),
- hallways,
- rooms with highly explosive and flammable substances and materials or mixtures which can represent a potential flammable risk,

- rooms or flats with air circulation or hot air circulation with ventilation systems (air condition, extractor or kitchen hoods), except if such ventilation systems have safety mechanisms, which sustain the air pressure above 4 Pa in a room, where the fireplace is mounted or in rooms which are in direct contact with exterior air.

3. TECHNICAL FEATURES

SENKO fireplaces are **made of quality boiler metal sheets**. The water container is located at the rear, on the sides and at the top. This is why SENKO fireplaces have a **high efficiency rate** and can be mounted combined with any other heating system.

At the bottom is an ash box, above it the firebox and at the top there are tubes for room air heating.

Attachments for the central heating system are located on the rear side of the fireplace.

Figures below are showing the supplied parts of the fireplaces.

SCHEMATIC OVERVIEW OF FIREPLACE *E2284 CENTRAL 20-25 kW*

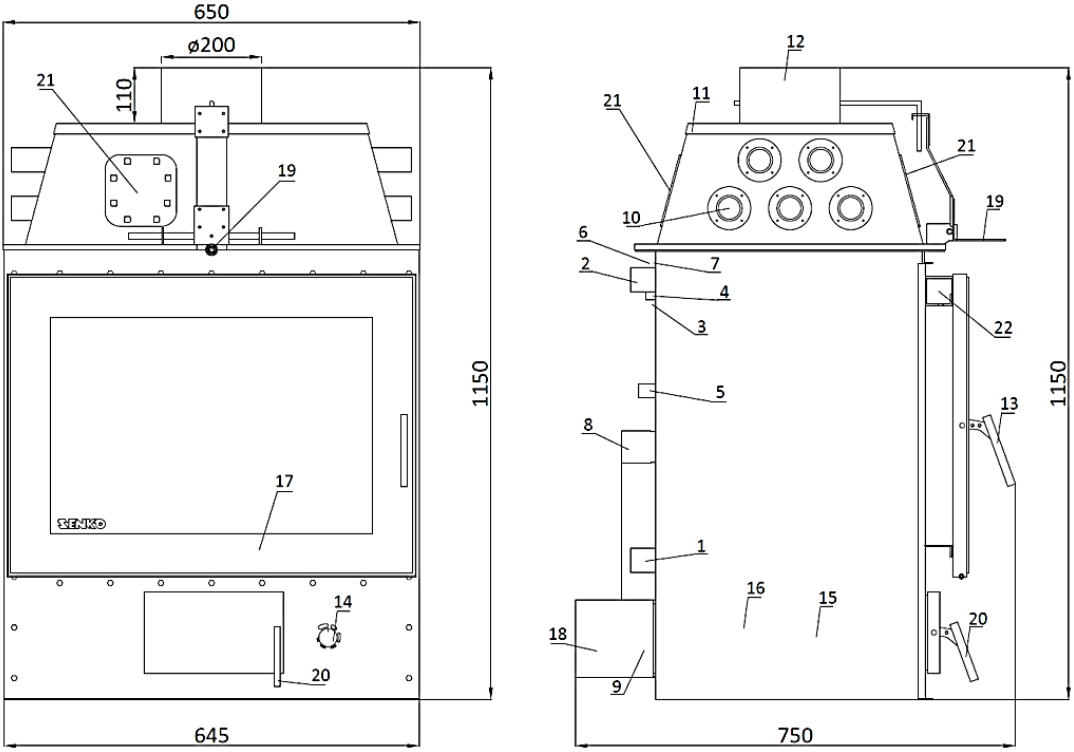

figure 4

THE KEY :

1. R1'' cold water connection point
2. R1'' warm water connection point
3. R3/4'' safety valve probe connection point of the boiler thermal protection
4. R1/2" automatic regulator probe connection point
5. R1/2'' inlet water connection point of the boiler thermal protection
6. R1/2" deaerating valve connection point
7. R1/2'' outlet water connection point of the boiler thermal protection
8. Secondary air inlet
9. Primary air inlet
10. Room heating tubes
11. Dome
12. Chimney connection point extension
13. Door handle
14. Primary air automatic regulator handle
15. Ash box
16. Firebox grate
17. Protective sheet
18. Primary air automatic regulator
19. Flue damper handle
20. Lower door handle
21. Inspection opening for dome cleaning
22. Opening for secondary air circulation needed for firebox glass door cleaning

SCHEMATIC OVERVIEW OF FIREPLACE *E2285 CENTRAL 30-35 kW*

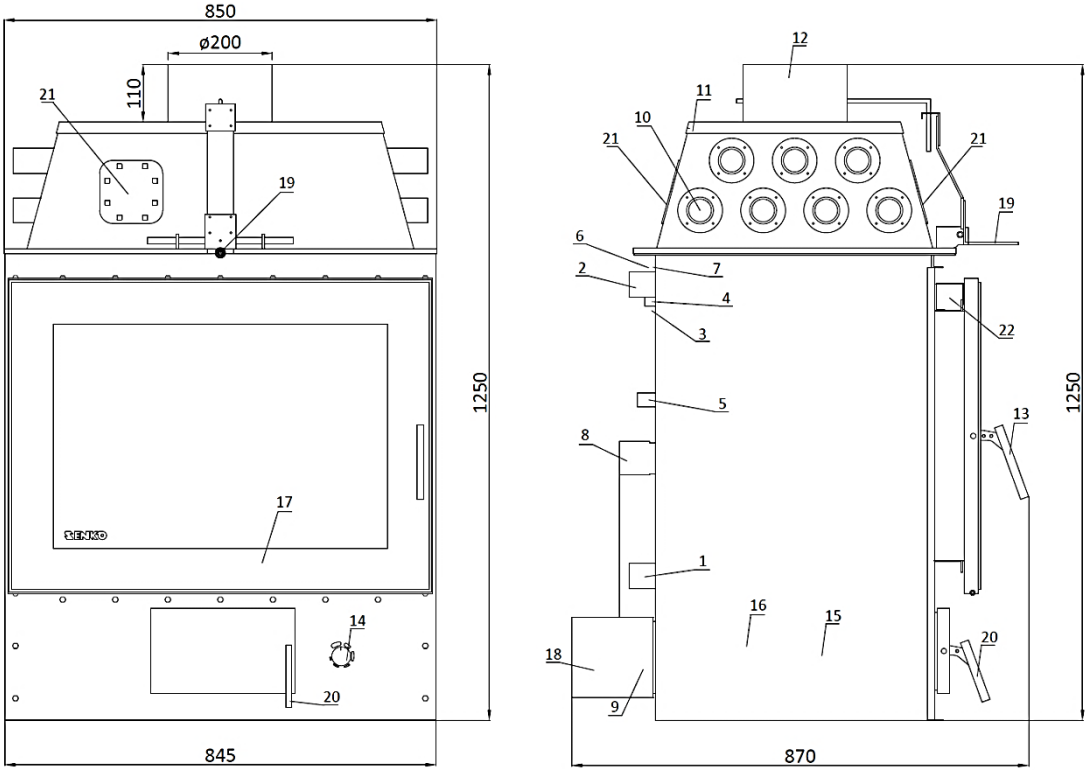

THE KEY :

figure 5

1. R5/4'' cold water connection point
2. R5/4'' warm water connection point
3. R3/4'' safety valve probe connection point of the boiler thermal protection
4. R1/2" automatic regulator probe connection point
5. R1/2'' inlet water connection point of the boiler thermal protection
6. R1/2" deaerating valve connection point
7. R1/2'' outlet water connection point of the boiler thermal protection
8. Secondary air inlet
9. Primary air inlet
10. Room heating tubes
11. Dome
12. Chimney connection point extension
13. Door handle
14. Primary air automatic regulator handle
15. Ash box
16. Firebox grate
17. Protective sheet
18. Primary air automatic regulator
19. Flue damper handle
20. Lower door handle
21. Inspection opening for dome cleaning
22. Opening for secondary air circulation needed for firebox glass door cleaning

4. INSTALLATION

When attaching a fireplace to the chimney, you need to **comply with** certain local, national and European **regulations**. A fireplace shall be mounted by a **qualified expert** who has to make a written report – installation report (at the end of this manual). Without such a report the manufacturer will not acknowledge any warrantee (see Chapter 11).

When unpacking the fireplace, **check for any possible damage** that might have occurred during transportation. When you notice any damage on the supplied parts, immediately notify the manufacturer.

At all locations of the fireplace, where components can be attached to (water, thermic protection, chimney, air pipe…) **inspection openings have to be mounted to ensure maintenance and servicing.**

4.1. POSITIONING

A spirit level must be used to place the fireplace in a horizontal position with no incline. **The bottom part of the fireplace has to be completely sealed** (height of the concrete base should be at the ash box guide) so there is no uncontrolled primary air outlet.

Please ensure a **minimum distance between the fireplace and potentially inflammable objects** like wood, chipboard or cork. If there are any more inflammable materials near the fireplace, like PVC or polyurethane compounds, the safety distance has to be twice as big.

The **minimum distance from inflammable surfaces** in front of the fireplace and behind it has to be 800 mm and 500 mm in other directions.

If you mount your fireplace on inflammable floor materials (**wooden floors** i.e.), you have to mount the product **on a 60 mm non-inflammable insulation layer**. The layer has to reach 800 mm in front of the fireplace and 400 mm away in other directions (Figure 6).

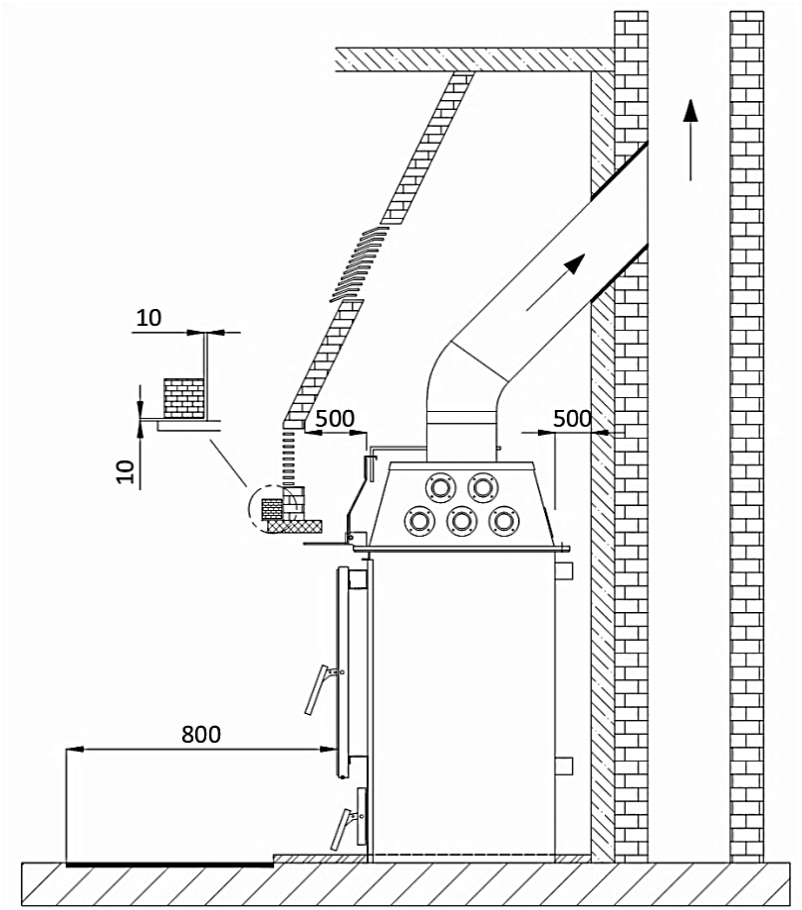
10
10
500
500
800

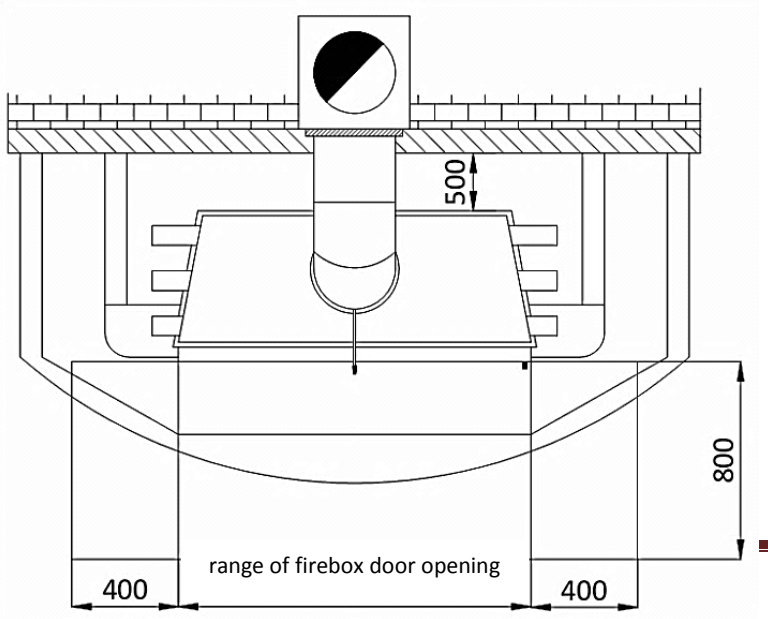
500
800
range of firebox door opening
400
400

figure 6

4.2. CHIMNEY PREPARATION AND CONTROL

Prior to fireplace mounting, it is necessary to check the chimney – the diameter, height, possible clogging or damages. The chimney must be **certified by an authorized local chimney-sweeper.** The effective **chimney height** must be **at least 5 meters** from the point of flue gases outlet (*figure 7b*).

Flue draught must be within parameters:

- for Central 20-25 kW ⇒ 12 ± 2 Pa,
- for Central 30-35 kW ⇒ 15 ± 2 Pa.

The chimney must be **at least 0,5 meters above the roof ridge. The minimum distance between the two connections on the same chimney must be 60 cm** (*figure 7d*).

Chimney diameter is chosen according to information provided by the chimney manufacturer – e.g., for flue draught of 15 Pa, the diameter is 200 mm and height 7 m.

The chimney must be smooth on the inside, well insulated and well fastened. All cleaning hatches must be well fastened. All gaskets must be regularly inspected and replaced when necessary.

4.3. CONNECTING TO CHIMNEY

When connecting the fireplace to the chimney it is necessary to adhere to local, national and European regulations (norms) – **DIN 4705**.

It is necessary to ensure that **the connection between the fireplace and the chimney is executed tightly and impermeably**. Smoke outlet pipe must have **a suitable incline in cases where the fireplace is removed from the chimney opening**.

Smoke outlet pipe must not penetrate into the chimney clear opening (*figure 7c*).

Differences between the proper and improper connection of the fireplace to the chimney are displayed in the following figure.

Differences between the proper and improper connection of the fireplace to the chimney

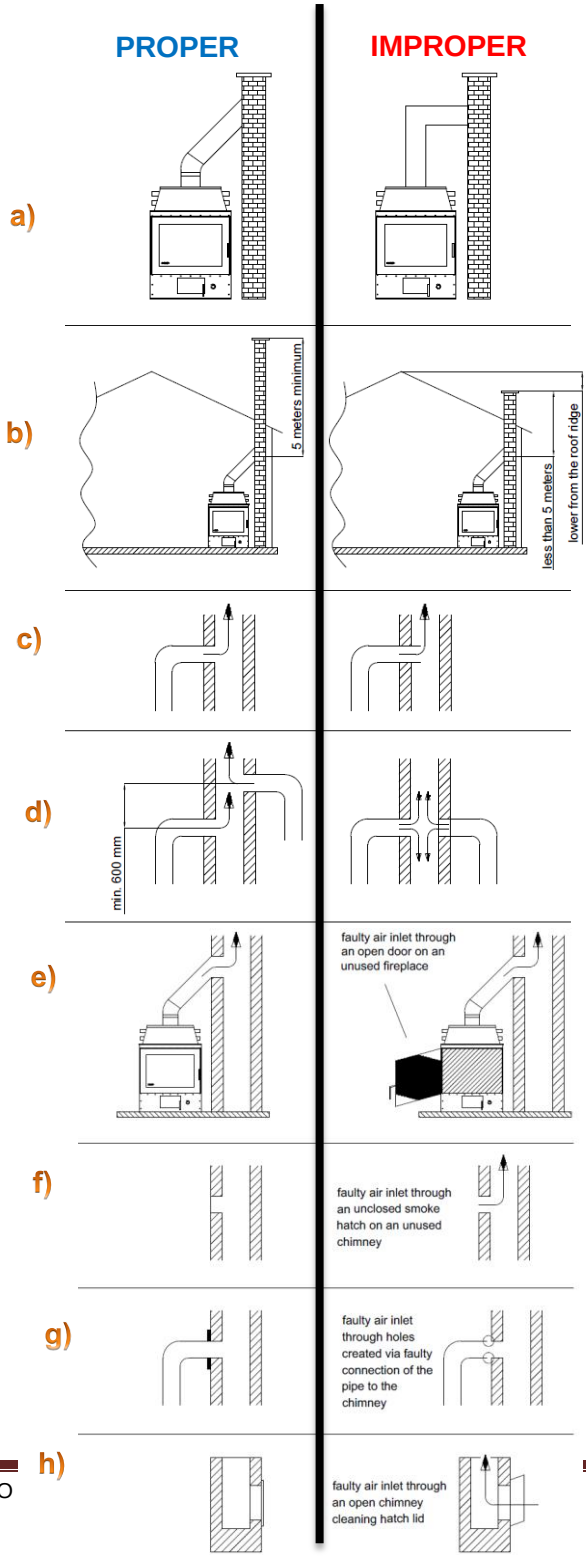

figure 7

4.4. FRESH AIR VENTS

The room where the fireplace is installed **must be provided with sufficient air inflow to ensure combustion**. The area must be regularly ventilated.

The fresh air vent must be situated **near the room floor** and allow the inflow of fresh air into the room. **The minimum dimension of the vent must be 6 cm^2 per kW of nominal power** (e.g. for 30 kW ⇒ 180 cm^2 ⇒ 10 x 18 cm vent).

A pipe can also be installed on the existing opening 150 x 80 mm (9) on the rear side of the fireplace for the purpose of entering fresh outside air; pipe Ø100 mm (for Central 20-25 kW), respectively pipe Ø150 mm (for Central 30-35 kW).

4.5. CENTRAL HEATING SYSTEM CONNECTION

Prior to commencing the firing procedure, the fireplace must be connected to waterworks and central heating system and the boiler must be filled with water. **Continuous circulation of water through the boiler** must be ensured. The boiler must be well deaerated prior to operations commencement.

The pipe installation **must be executed in accordance with valid technical regulations** and DIN 4751 norm – part 1 for open systems and DIN 4751 – part 2 for closed systems, following **professional standards**, and **only by an authorized expert**.

It is not allowed to reduce the diameter of the pipe connecting the boiler to the heating installation connection point. Otherwise, the warranty will be void.

Prior to connecting the boiler to the heating installation, **the pipelines are to be thoroughly cleansed from potential filth sediments**. This prevents boiler overheating, system noise, pump malfunctions and mixing valve malfunctions. **The connection** to the heating system **is executed via union flat joint, with or without the mixing valve** onto an open or closed system.

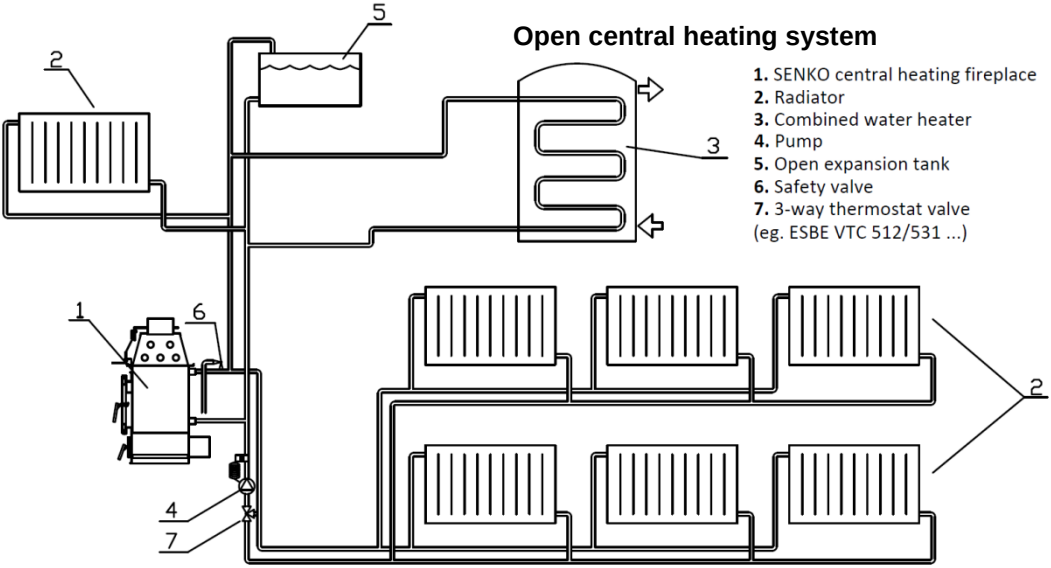

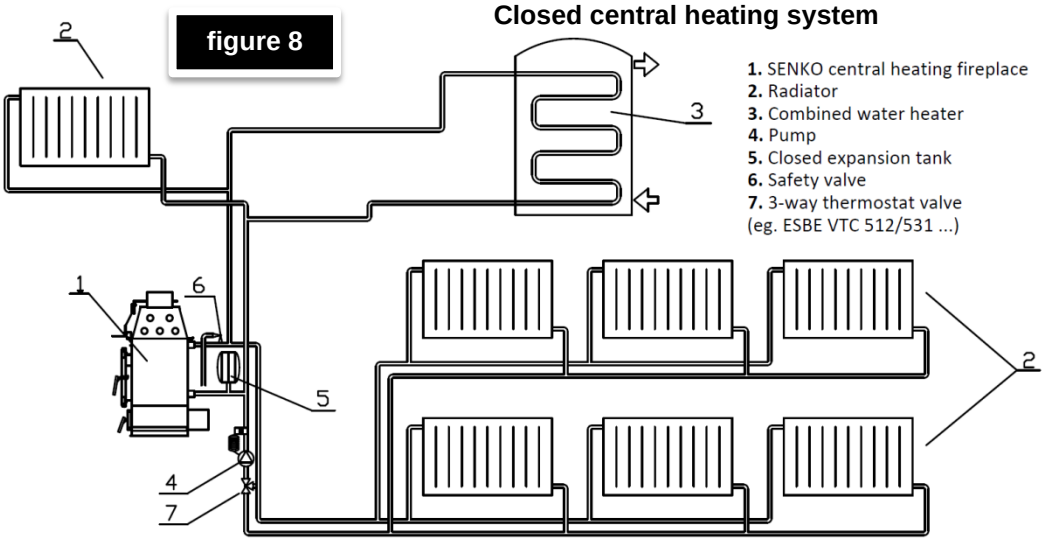

figure 8

Installation of an approved safety valve with opening overpressure set to 2,5 bar is mandatory in closed systems. Safety and expansion conduits must not have any kind of block elements.

It is necessary to **install the deaerating valve**. When filling the boiler and the radiator system it is necessary to open the mixing valve, if one had been installed; adequately deaerate the boiler and the heating system.

The mixing valve (**7** – *figure 8*) **maintains the boiler temperature at minimum the 60°C, thus preventing the boiler from condensation**. If one had not been installed, it is necessary to ensure firing conditions that will prevent boiler condensation. **Condensation may appear at the beginning of the firing process or due to insufficient feeding.**

4.5.1. FIREPLACE THERMAL PROTECTION

When connecting the fireplace to the central heating system it is **necessary to install the safety thermal valve.** It shall be installed on the **fireplace rear side to R3/4'' connection point** – external thread ⇒ see *figures 9-12*.

Water outlet into the sewer (or SW tank – sanitary water) is connected to connection point:

- **R3/4'' (8)** - *figure 9*, OR
- **R1/2'' (8)** - *figure 10*, OR
- **R3/4'' (9)** - *figure 11*.

The sensor (probe) **of the safety thermal valve** is connected to the **connection point (5)** ⇒ broken line in *figures 9-12*.

THE BOILER MUST NOT BE USED WHEN EMPTY OF WATER!

The central heating system must have its own separate **thermo-manometer** !

Orientation schematic for connecting fireplace to a central heating system are shown in the following figures.

Schemes shown are for guidance only and do not have the project value !

4.5.1.1. THERMAL TWO-WAY SAFETY VALVE

Orientational schematic for connecting the fireplace to a central heating system with a thermal two-way safety valve

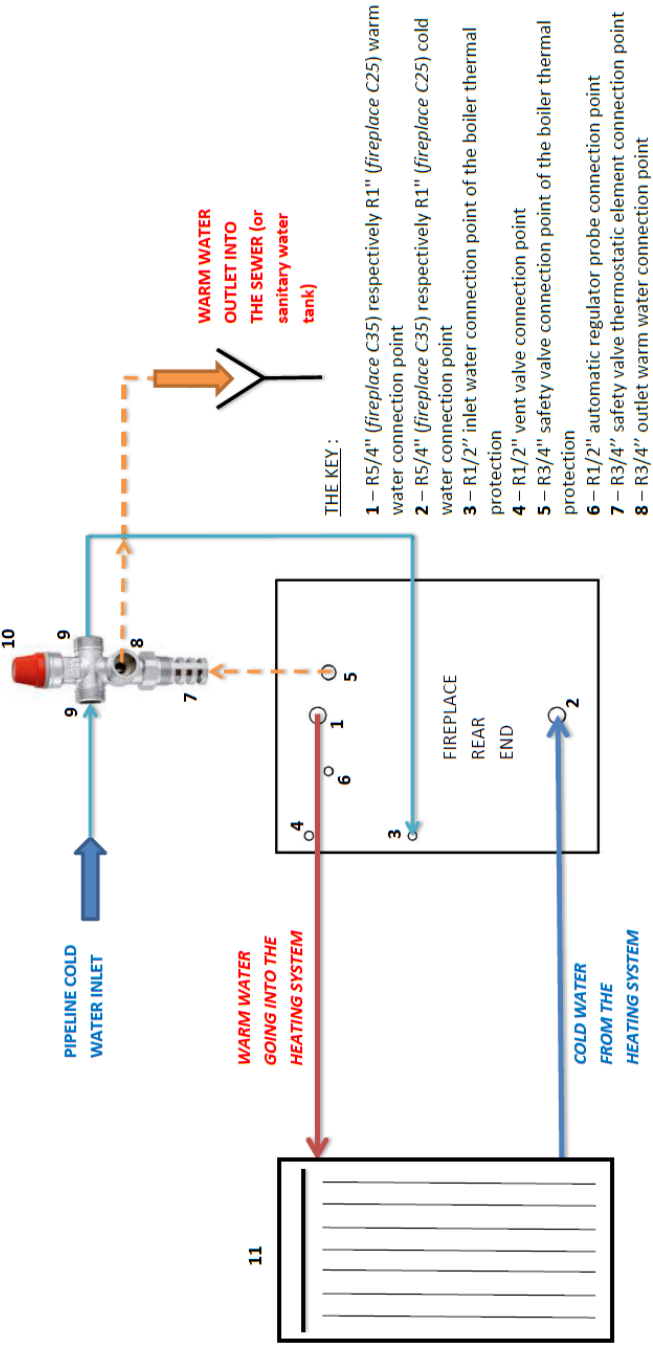

THE KEY :

1 – R5/4" (*fireplace C35*) respectively R1" (*fireplace C25*) warm water connection point
2 – R5/4" (*fireplace C35*) respectively R1" (*fireplace C25*) cold water connection point
3 – R1/2" inlet water connection point of the boiler thermal protection
4 – R1/2" vent valve connection point
5 – R3/4" safety valve connection point of the boiler thermal protection
6 – R1/2" automatic regulator probe connection point
7 – R3/4" safety valve thermostatic element connection point
8 – R3/4" outlet warm water connection point
9 – R3/4" inlet cold water connection point
10 – thermal two-way safety valve
- CALEFFI 544501, REGULUS DBV1, HERMAN TDS1 ...
  - ⇒ valve maximum operational pressure: 6 bar
  - ⇒ maximum temperature valve can withstand: 120°C
  - ⇒ maximum water flow with 1 bar pressure difference: 1,8 m^3/h at 110°C

11 – heating system

NOTE: Execute the installation in accordance with valid technical regulations and the DIN 4751 norm – part 1 for OPEN SYSTEMS and DIN 4751 – part 2 for CLOSED SYSTEMS, following all professional rules, and only by an authorized expert.

figure 9

Orientational schematic for connecting the fireplace to the central heating system with CALEFFI 544400 thermal safety valve

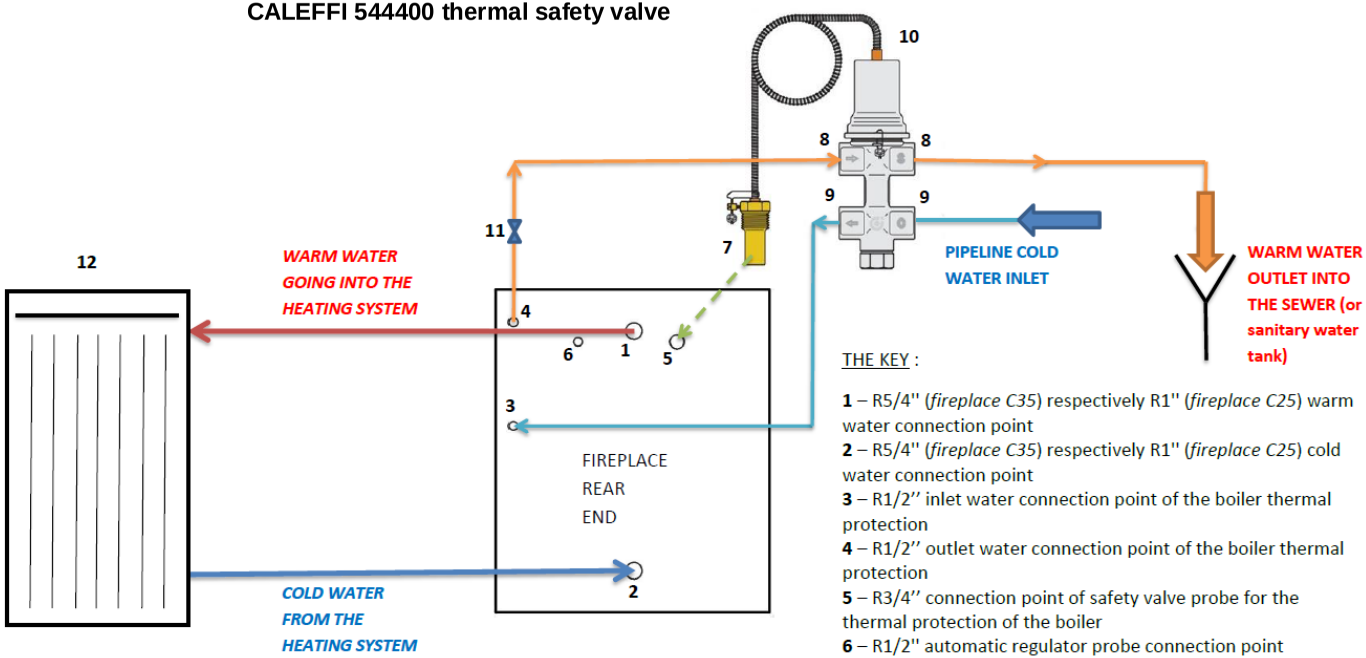

THE KEY :

1 – R5/4'' (*fireplace C35*) respectively R1'' (*fireplace C25*) warm water connection point
2 – R5/4'' (*fireplace C35*) respectively R1'' (*fireplace C25*) cold water connection point
3 – R1/2'' inlet water connection point of the boiler thermal protection
4 – R1/2'' outlet water connection point of the boiler thermal protection
5 – R3/4'' connection point of safety valve probe for the thermal protection of the boiler
6 – R1/2'' automatic regulator probe connection point
7 – R1/2'' safety valve probe
8 – R1/2'' outlet warm water connection point
9 – R1/2'' inlet cold water connection point
10 – thermal safety valve CALEFFI 544400
⇒ valve maximum operational pressure: 6 bar
⇒ working temperature: 5-110°C
⇒ maximum water flow with 1 bar pressure difference: 1,6 m^3/h
11 – vent valve
12 – heating system

NOTE: Execute the installation in accordance with valid technical regulations and the DIN 4751 norm – part 1 for OPEN SYSTEMS and DIN 4751 – part 2 for CLOSED SYSTEMS, following all professional rules, and only by an authorized expert.

figure 10

Orientational schematic for connecting the fireplace to the central heating system with anti-freezing protection (antifreeze)

THE KEY :

1 – R5/4" (*fireplace C35*) respectively R1" (*fireplace C25*) warm water connection point
2 – R5/4" (*fireplace C35*) respectively R1" (*fireplace C25*) cold water connection point
3 – R1/2'' inlet water connection point of the boiler thermal protection
4 – R1/2'' outlet water connection point of the boiler thermal protection
5 – R3/4'' connection point of safety valve probe for the thermal protection of the boiler
6 – R1/2" automatic regulator probe connection point
7 – inlet warm water R2'' connection point of the safety heat exchanger
8 – outlet cold water R2'' connection point of the safety heat exchanger
9 – R3/4'' inlet/outlet water connection point
10 – R1/2'' connection point CLOSE!
11 – R3/8'' connection for the deaerating valve
12 – safety (cooling) heat exchanger
- such as BUDERUS Logano G211 coolant loop, BOSCH safety exchanger, VIADRUS cooling exchanger...

13 – thermal safety valve CALEFFI 544400
14 – vent valve
15 – heating system

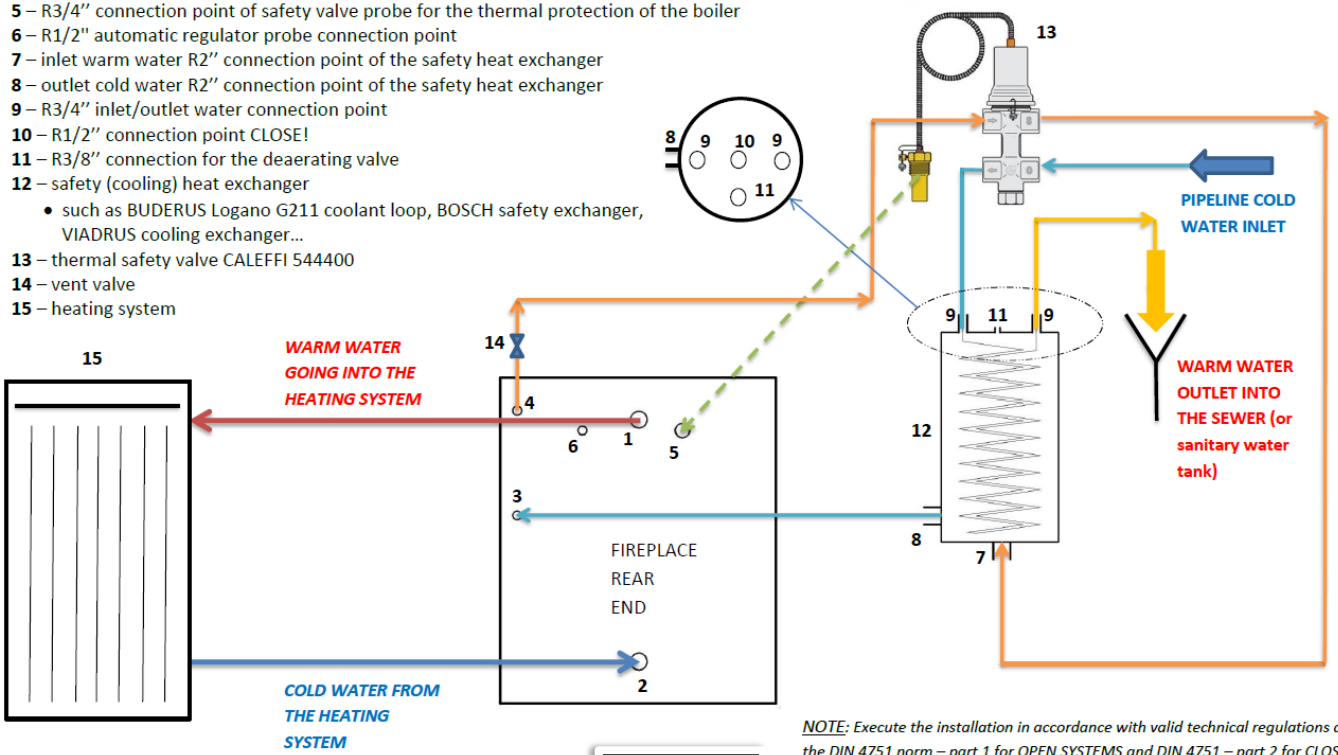

figure 11

NOTE: Execute the installation in accordance with valid technical regulations and the DIN 4751 norm – part 1 for OPEN SYSTEMS and DIN 4751 – part 2 for CLOSED SYSTEMS, following all professional rules, and only by an authorized expert.

Orientational schematic for connecting the fireplace to the central heating system with a heat exchanger (buffer)

THE KEY :

1 – R5/4" (*fireplace C35*) respectively R1" (*fireplace C25*) warm water connection point
2 – R5/4" (*fireplace C35*) respectively R1" (*fireplace C25*) cold water connection point
3 – R1/2'' inlet water connection point of the boiler thermal protection
4 – R1/2'' outlet water connection point of the boiler thermal protection
5 – R3/4'' connection point of safety valve probe for the thermal protection of the boiler
6 – R1/2" automatic regulator probe connection point
7 – warm water inflow into the heat exchanger
8 – cold water outflow out from the heat exchanger
9 – R1/2'' thermal safety valve probe
10 – R3/4" connection point
11 – thermal safety valve CALEFFI 543513
⇒ valve maximum operational pressure: 10 bar
⇒ working temperature: 5-110°C
⇒ maximum water flow with 1 bar pressure difference: 3 m^3/h
12 – vent valve
13 – heating system

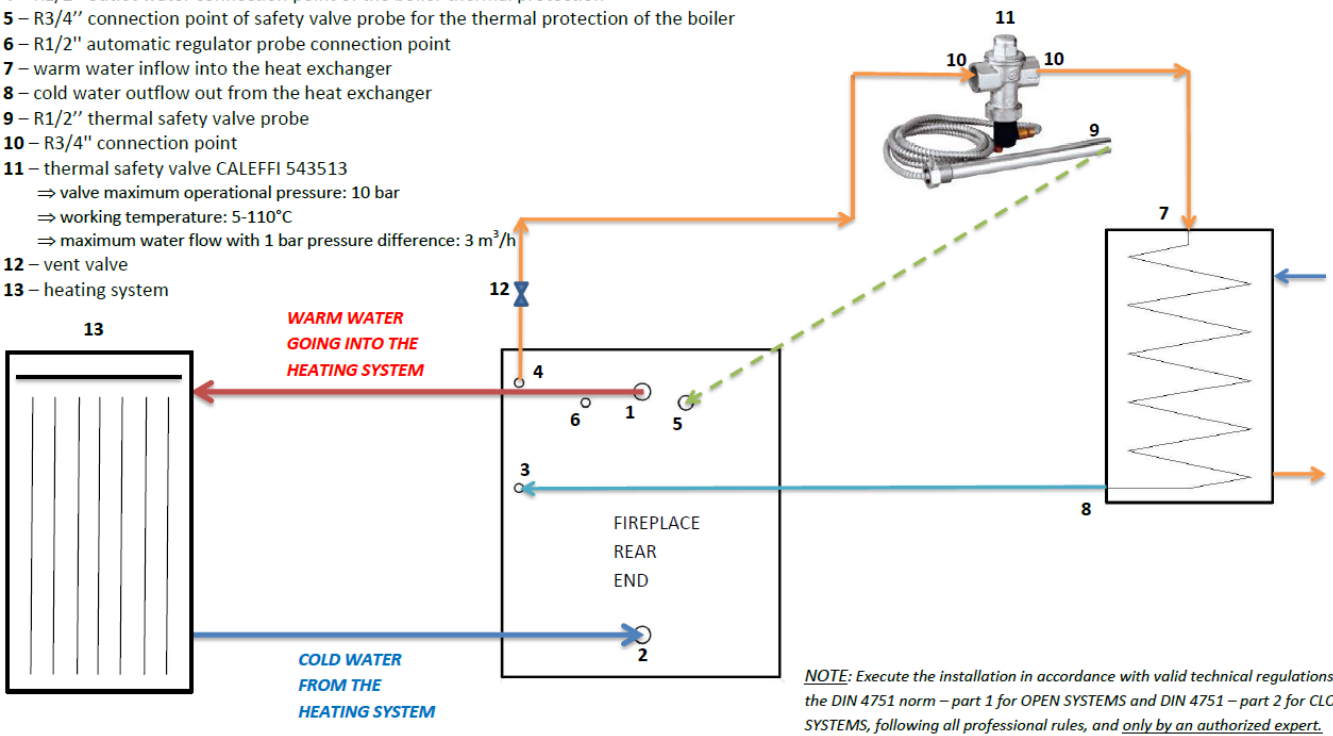

NOTE: Execute the installation in accordance with valid technical regulations and the DIN 4751 norm – part 1 for OPEN SYSTEMS and DIN 4751 – part 2 for CLOSED SYSTEMS, following all professional rules, and only by an authorized expert.

figure 12

SENKO cookers and fireplaces
SENKO

4.5.2. INSTALLATION TESTING

Prior to initial firing it is necessary to check if the boiler and the entire heating system are filled with water and well deaerated. Also check if the smoke uptake pipe is properly fastened.

After initiation make sure:

- there is no leakage of any kind,
- that the entire installation is deaerated,
- that the water temperature in the boiler is increasing,
- that boiler operations do not result in condensation ("sweating") in the chimney.

Also, PRIOR TO INSTALLATION **activate the safety valve and check its proper functionality**.

4.5.3. RECEIVING AND MAINTAINING THE INSTALLATION

When receiving the installation, inspect the installation in its entirety with the contractor. **The contractor is obligated to provide basic information about the installation operations and indicate the position and function of the installation key components**. Also, the contractor is obligated to complete the installation report which can be found at the end of this *Manual*!

Deaerate the entire heating system after several days and refill it with water if necessary.

Inspection of installation working performance is to be executed at least once a year by an authorized maintenance technician. This will ensure safe working performance of the boiler, as well as economic and immaculate heating.

In case of installation faulty operation, contact your central heating installation contractor exclusively !

4.6. FIREPLACE LINING

4.6.1. LININGS

Fireplace lining has to be made **of fireproof materials** (i.e. stone or clay panels, ceramic clay panels for stoves). Avoid direct contact between linings and fireplace. The lining can overlap only a separated frame, which is mostly mounted to a wall.

You should also **cover the dome (11)** for decreasing the exterior temperature of the dome. Apply a 0,6 mm thick layer of white galvanized metal sheets on the dome.

4.6.2. AIR VENTS

Hot air inlet and outlet openings **cross section shall be 600 cm^2 at the minimum**. After mounting the fireplace mentioned openings **shall not be covered with any building materials**.

You **shall not** mount grates into such openings, especially not grates, (Venetian) blinds or leaves, so basically any object that can't be open.

Openings must be always free for air circulation.

4.6.3. DECORATIVE BEAMS

You can add decorative beams only in a **distance at least 10 mm from the fireplace lining**, but only if the decorative beam is not a part of the building and if the interim area to the lining is free, otherwise a heat block can happen. Also the decorative beam shall not be mounted in the fireplace irradiation area.

4.6.4. FIRE PROTECTION

After mounting the proper chimney attachment you need to carry out **pre-masonry work and insulate the area around the fireplace against heat**. You need to ensure a 800 mm safety distance in front of the fireplace and on the sides (see (26) *Figure 13*).

THE KEY :

1. Ceiling of fireproof material
2. Insulation (carry out according to DIN 18160)
3. Smoke uptake pipe made of steel sheets
4. Sheet metal covering convection air chamber
5. Heating insulation layer (rear side)
6. Primary walling
7. Protective wall of fireproof material or building material of concrete/steel concrete
8. Heating insulation layer (stone wool), 100 mm thick at minimum
9. Primary air inlet for combustion
10. Heating insulation layer (floor)
11. Support plate
12. Protective floor of fireproof material or building material
13. Non-inflammable base insulation (for wooden floors)
14. Concrete base (ash box guiding mechanism thickness)
15. Ash box
16. Firebox door
17. Opening for air circulation needed for firebox glass door cleaning (when carrying out the lining, leave the opening free for air circulation)
18. Bearing frame
19. Decorative beam
20. Hot air outlet grate
21. Tubes for room heating air-through (free or forced circulation)
22. Flue damper handle
23. Linings
24. Bearing element
25. 60 mm heating insulation layer
26. 800 mm irradiation area

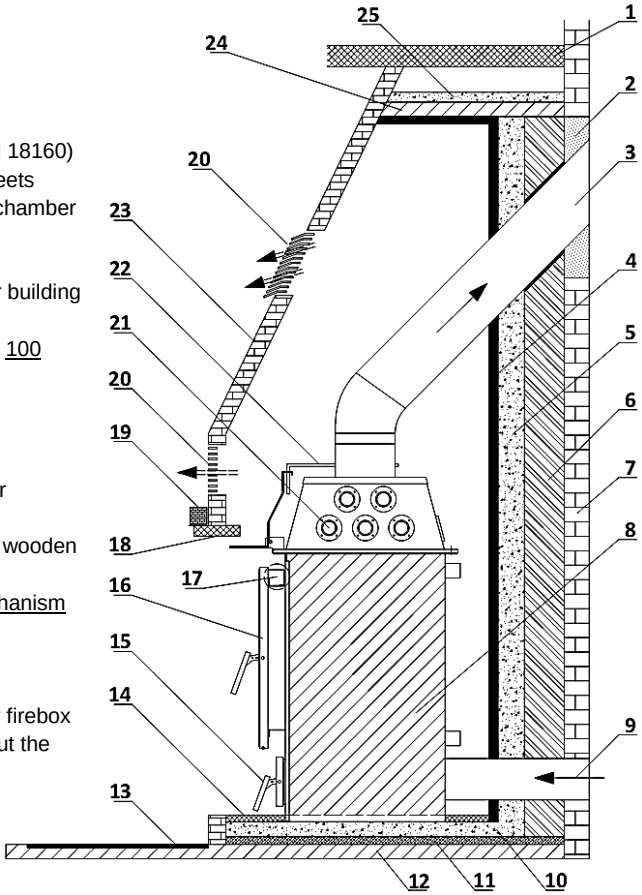

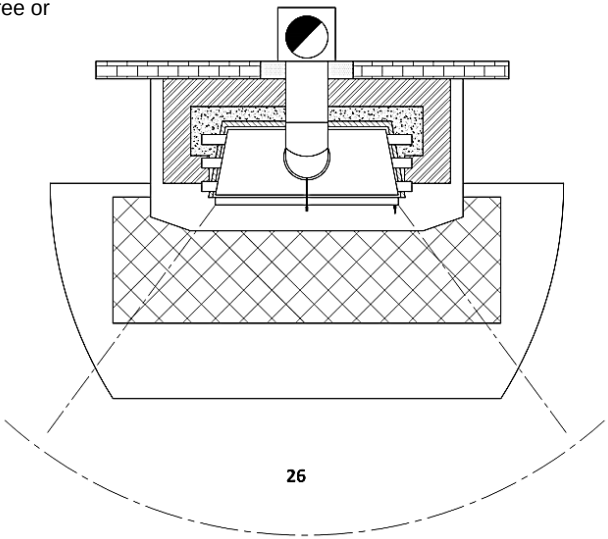

figure 13

5. HANDLING THE PRODUCT

5.1. AIR ADJUSTMENT AND REGULATION

CHIMNEY

The flue damper must be adjusted to keep the **chimney flue draught within the limitations**:

- for Central 20-25 kW ⇒ 12 ± 2 Pa,
- for Central 30-35 kW ⇒ 15 ± 2 Pa.

PRIMARY AIR

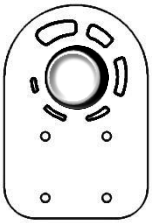

Primary air is the air that flows directly through the firebox grate. Right from the ash box (20) is the knob (14) of primary air automatic regulator. Turning the PVC wheel of the automatic regulator **regulates primary air flow**.

SECONDARY AIR

Secondary air is the air that flows into the firebox to facilitate maximum combustion, reducing harmful substances to ashes and discharging flue gas with low capacity for pollution into the chimney.

During fireplace lining, it is necessary to leave opening above the firebox door available for free circulation of the secondary air required for glass cleaning!

Secondary air connection point (8) is located on the back side of the fireplace in the connection with the primary air inlet (9).

5.2. FIRING

5.2.1. PROCEDURE

Prior to every firing, follow the following procedure :

- vent damper on the chimney open until the end (move the lever fully to the left),
- open the primary air inlet,
- open the firebox door (maximum door opening angle is 90°),
- put the kindle wood into the firebox and ignite it,
- close the firebox door,
- monitor flame progression through the firebox door,
- once the fire is in full flame, add wooden logs as necessary,
- regulate the fire intensity by regulating the volume of primary air via automatic regulator,
- wide grate (16) openings must be positioned facing upwards at all times to allow the ashes to fall down.

WARNING! Never use flammable liquids, such as petrol and similar to ignite the fire and always keep these and similar liquids away from your fireplace.

5.2.2. OPTIMUM USE VALUES

Primary air volume and chimney flue draught must be adjusted to levels that **prevent boiler water temperature from exceeding 85°C**.

Maximum quantity of fuel that can be accommodated in the firebox:

- 6 kg for Central 20-25 kW,
- 8 kg for Central 30-35 kW.

Adding fuel in regular intervals, in quantities of 2 to 4 kg, is recommended.

Fireplace optimum values may be achieved only if the fireplace nominal power was chosen in accordance with the rules of profession and object energetic efficiency.

5.2.3. ADDING FUEL

Apart from use of appropriate fuel and satisfactory chimney flue draught, the manner in which the fireplace is fuelled **also influences the glass cleanness**.

We recommend only **one layer in each fuel refill** and, if possible, the **use of logs of length up to 2/3 of the firebox length**. There should be **a minimum distance of 1-2 cm between the logs.**

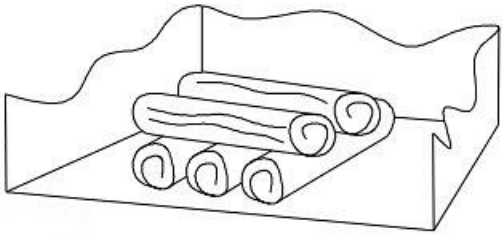

figure 14

Briquettes should be used in amount that only covers the firebox surface, also with a **minimum distance of 1-2 cm** between them.

WARNING! <u>New fuel quantities</u> should be <u>added</u> only on top of embers, i.e., not on the flames, but only <u>on top of embers (approx. 1 cm thick)</u>.

Primary air automatic regulator must be completely closed at least ten seconds before opening the firebox door to prevent the breach of flue gases into the residential area.

The door must be opened slowly. After adding the fuel, close the door slowly. **Open the primary air automatic regulator to decrease the time of fuel combustion.**

Once the fuel starts burning, adjust the primary air automatic regulator to a desired position ⇒ in accordance with *chapter 5.1*.

Vent damper on the chimney outlet, MUST BE opened <u>before opening the firebox door</u> !

5.2.4. FEEDING IN TRANSITION PERIOD

During the transition period, i.e. **when outdoor temperatures are higher**, sudden increase in outdoor temperature can **cause chimney malfunction** (decreased chimney flue draught) resulting with not all flue gases being expelled into the atmosphere.

It is therefore recommended to **use less fuel and smaller logs** during the transition period in order to achieve a more lively flame, as well as to **adjust the primary air volume** in order to improve the expulsion of flue gases from the chimney.

5.2.5. SPACE HEATING

Tubes (10) are embedded in the dome (11)**, through which passes the air for space heating.** Air can circulate natural and can also forcibly, installing the fan and routers.

6. CLEANING

You need to clean **the fireplace, the dome (11) and the chimney** regularly (at least once in a month). Cleaning of the dome can be carried out through the opening (21) on the rear side of the dome.

When cleaning the interior side of the fireplace, you need to clean up the soot in the boiler, in the dome including the chimney connection point extension (12) through the knee of the smoke uptake.

6.1. GLASS CLEANING

During normal operation of the fireplace, especially when the flame is weak, **soot and grease can occur on the glass**. Clean the glass only if needed. Cleaning has to be more often, if the fuel humidity and firebox temperature vary a lot.

Under no circumstances clean the glass with standard kitchen cleaning agents or other common cleaning agents, since those could lead to ignition. We recommend cleaning with non-inflammable agents like those for cleaning grills or ovens or our own SENKO soot and grease cleaning agent. The agent is supplied to you together with the fireplace !

Best way to clean the glass is while it is cold → simply wipe it with a soft cloth or blotting paper.

6.2. ASH CLEANING

Amount of ash depends on fuel type and fuel humidity. Amount of ash is decreasing if the fuel is more dry (see Chapter 1.1) and if the combustion temperature is high.

Ash box (15) and box space shall be cleaned every day. Ash disposal should be carried out in an environmentally friendly way.

Combustion temperature in the firebox is lower **in summer and fall**. This means an increased amount of ash, so carry out cleaning more often.

If the ash box is full, grate channels may be blocked, so the primary air flow needed for sustaining the fire flame may be reduced. **We recommend keeping 2-3 cm layer of ash in the firebox every time, so you can accelerate the flame burning on the base of the ash layer any time !**

6.3. CHIMNEY CLEANING

For your safety, you should consider cleaning of the chimney at least once in a year.

Cleaning shall be carried out by a qualified chimney-sweeper !

7. MAINTENANCE

7.1. FIREBOX MAINTENANCE

Soot and other dirt will cover the interior of your fireplace depending on the rate of usage. Soot and dirt lead to a low efficiency rate of your fireplace and decrease the heat exchange.

Therefore, we recommend **cleaning of interior walls of the firebox with a brush at least once in a year**, if needed even more times.

Tighten the handle safety bolt located on the firebox door with a crosshead screwdriver only if needed.

7.2. MAINTENANCE DURING SUMMER

Clean the firebox, chimney and ash box thoroughly. If the room with the fireplace is very humid, we recommend putting salt in a container into the firebox. The salt will absorb the humidity.

7.3. AUTOMATIC REGULATOR

When replacing the automatic regulator, adhere to the following procedure:

- loosen 3 bolts (Figure 15b and c) and remove the automatic regulator lid, which is located on the rear side of the fireplace,
- pull out the probe from the boiler – Figure *15 d*,
- **maximum allowed probe temperature is 90°C**! The warranty is void if the probe temperature exceeds the maximum value!
- straighten the capillary that contains the probe and pull it out through the opening located on the lid of the automatic regulator,
- pull out the cable, which is connected to the automatic regulator – Figure *15e* and *f*,
- loosen 4 M6 bolts with a wrench – Figure *15g* and *h*,
- remove and change the automatic regulator.

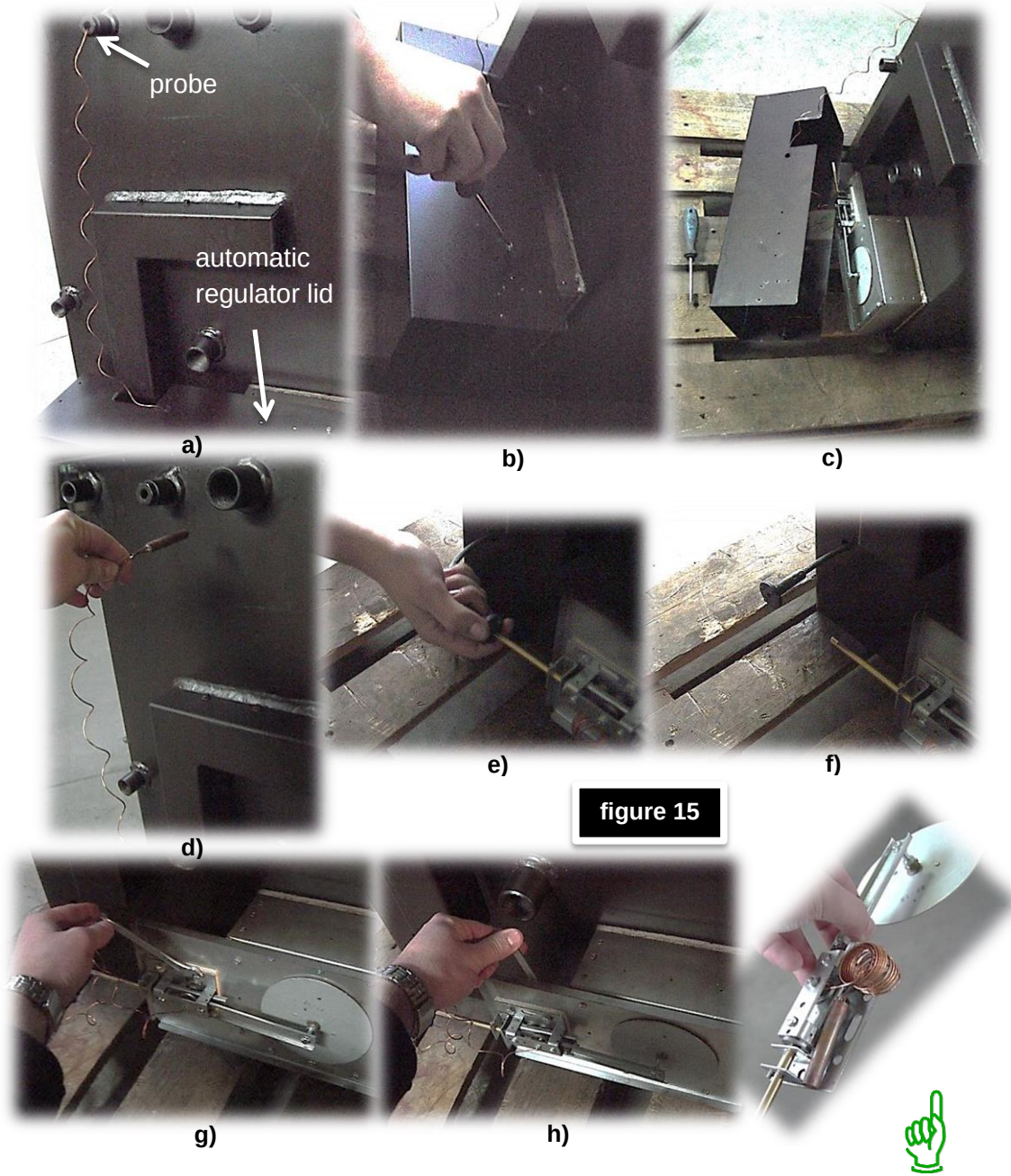

figure 15

⇒ installation of a new regulator is executed by reversing the procedure, provided that the **probe capillary must not have an angle equalling or exceeding 90° at any point, and all transitions must be executed in slight radius!**

7.4. OLD FIREPLACE DISPOSAL

Once the fireplace is no longer fit for use it must be delivered to an authorized disposal service specialized in recycling this type of waste. **It is forbidden to dispose of the old fireplaces in the natural environment !**

7.5. SPARE PARTS

Only original spare parts by the manufacturer are to be used. Should non-original spare parts be used or should the repair be executed by an unauthorized individual, the warranty will be void.

8. MALFUNCTIONS / CAUSES / SOLUTIONS

PROBLEM	POSSIBLE CAUSE	SOLUTION
Excessive combustion – inability of primary air regulation	♦ uncontrolled primary air inlet into firebox – too low chimney draught (below 10 Pa)	⇨ completely seal fireplace base with the floor on which the fireplace is mounted (before lining work !) – see (14) Figure 13 ⇨ completely close the ash box ⇨ reduce or close the primary air automatic regulator ⇨ adjust the chimney flue draught in accordance with chapter 4.2. ⇨ check the joint of fireplace and chimney and the chimney itself ⇨ check Chapters *4.2.* and *4.3.*
Firebox door glass is black and/or the firebox is smoky (black soot)	♦ faulty regulation ♦ too much fuel in the firebox ♦ fuel too moist ♦ inadequate fuel ♦ excessive firebox temperature	⇨ study chapters 5.1 and 5.2.3. ⇨ reduce the fuel quantity ⇨ use fuel with less than 17% of relative moisture ⇨ use fuel as described in chapter 1.1. ⇨ reduce the fuel quantity and primary air volume and adjust chimney flue draught in accordance with chapter 5.1
There is noise from the boiler	♦ insufficient water level in the central heating system ♦ insufficient water pressure in the central heating system ♦ improper central heating installation	⇨ refill the central heating system with the necessary amount of water to achieve 2.5 bar pressure ⇨ increase water pressure to 2,5 bar ⇨ execute the central heating installation in accordance with professional standards and DIN 4751 norm - part 1 for open systems, i.e.

	♦ during the summer period, the boiler is not connected to the water heating boiler ♦ the fireplace is not placed in a horizontal position with the use of spirit level ♦ excessive velocity of water flow in the system	4751 – part 2 for closed systems ⇨ connect the boiler to water heater ⇨ mount the fireplace as described in chapter 4.1. ⇨ reduce the water circulation velocity by adjusting the number of pump rotations
Insufficient flue draught in the chimney; black smoke expelled from the chimney	♦ chimney filled with soot ♦ fireplace filled with soot ♦ chimney partially clogged or filled with soot ♦ fuel not sufficiently dry ♦ firebox cast grate turned in the wrong direction ♦ firebox door opened ♦ inadequate flue draught ♦ faulty regulation	⇨ clean the chimney ⇨ clean the fireplace ⇨ unclog and clean the chimney ⇨ use fuel in accordance with chapter 1.1. ⇨ set the grate in accordance with chapter 5.2.1. ⇨ close the door ⇨ adjust the flue draught in accordance with chapter 4.2. ⇨ adjust the primary and secondary air in accordance with chapter 5.1.
Smoke coming out of the fireplace	♦ fireplace or dome filled with soot ♦ chimney filled with soot ♦ fuel too moist ♦ low calorie fuel ♦ levels of fresh air in the room too low ♦ return water temperature too low ♦ firebox temperature too low	⇨ clean the fireplace and the dome as described in chapter 6 ⇨ clean the chimney as described in chapter 6 ⇨ use fuel as described in chapter 1.1. ⇨ study chapter 4.4. ⇨ set the thermostat to activate the pump at temperatures over 60°C ⇨ increase the firebox temperature by increasing fuel quantity
Water leaking from the boiler (boiler condensation)	♦ excessive water flow ♦ fuel too moist ♦ boiler damaged ♦ insufficient fuel quantity ♦ insufficient primary air volume	⇨ reduce the water flow ⇨ use fuel as described in chapter 1.1. ⇨ call an authorized maintenance technician ⇨ add more fuel to the firebox ⇨ increase primary air volume in accordance with chapter 5.1., check the functionality of the primary air automatic regulator
Temperature in firebox too low	♦ insufficient or excessive chimney flue draught ♦ excessive primary air volume	⇨ adjust the chimney flue draught in accordance with chapter 4.2. ⇨ reduce primary air volume ⇨ use fuel as described in chapter 1.1. ⇨ add less fuel to the firebox

	♦ inadequate fuel ♦ too much fuel – combustion difficult	
Temperature in firebox too high	♦ excessive chimney flue draught ♦ inadequate fuel ♦ too much fuel	⇨ reduce the chimney flue draught in accordance with chapter 4.2. ⇨ use fuel as described in chapter 1.1. ⇨ add less fuel to the firebox
Outlet boiler water does not reach the required temperature	♦ central heating system improperly dimensioned ♦ insufficient fuel quantity ♦ central heating system thermometer does not display the temperature properly	⇨ dimension the central heating system according to professional standards and DIN 4751 norm – part 1 for open systems, i.e. DIN 4751 – part 2 for closed systems ⇨ adjust the water flow in accordance with the boiler thermal possibilities ⇨ add more fuel to the firebox ⇨ install functional and approved (moderate) thermometer

9. TECHNICAL SUPPORT

Dear client,

If you were unable to find the solution to the malfunctions, that potentially developed while using your product, in the table above, please feel free to contact our complaint and support service:

- Tel.: +385 (0)40 337 344
- Fax.: +385 (0)40 337 906
- E-Mail: info@senko.hr

WE'D LIKE TO TAKE THIS OPPORTUNITY TO REMIND YOU WHAT YOU NEED TO POSSES WHEN CONTACTING OUR COMPLAINT AND SUPPORT SERVICE :

Before you contact us, prepare the following documents :

- **purchase receipt with the date of purchase**,
- **warranty** (at the back of this *Manual*),
- **written installation report** (at the back of this *Manual*),
- **Instruction manual**.

The documents listed above are necessary to ensure the quickest and clearest removal of the occurring malfunction.

10. TECHNICAL DATA

SENKO fireplace		Central 20-25 kW	Central 30-35 kW
Nominal heat output, kW		25	35
Boiler, kW		20	31
Room, kW		5	4
Amount of water in boiler, L		32	55
Operating pressure (max), bar		3	
Operating temperature, °C		85	
Width, mm		650	850
Depth, mm		750	870
Height, mm		1150	1250
Weight, kg		155	240
Firebox opening (W × H), mm		510×350	675×465
Firebox (W × D), mm		475×385	620×465
Firebox volume, dm^3		65,4	137,8
Fuel consumption, kg/h		9	10,5
Ash pan, L		7,5	10,5
Flue gases exhaust, mm		∅ 200	
Flue gas temperature, °C		310	370
Required flue draught, Pa		12	15
CO in flue gases at 13% O_2, %		0,3	0,2
Flue gas mass flow rate, g/s		25,5	39,5
Efficiency, %		80	69
Regulation	Primary air	automatic	
	Secondary air		
Certified in accordance with EN norm		EN 13229	

- technical specification apply to wood and wooden briquettes used as fuel
- technical specifications are indicative and may vary as such. The manufacturer withholds the right to change any technical specification to further improve the products

11. TERMS OF WARRANTY

These warranty conditions are valid in all European countries, in which SENKO products are sold. The client addresses the manufacturer/dealer or the nearest authorized servicing agent for all complaints; providing the purchase receipt with the date of purchase, warranty and installation report in the process.

DURATION OF THE WARRANTY

Manufacturer SENKO d.o.o. provides a **2-year** warranty for its product, starting from the date of embedded boiler purchase. All other parts (thermometer, automatic regulator with the probe, regulation buttons) have a **6-months** warranty.

The manufacturer guarantees that the product was manufactured and certified according to the EN 13229 norm and that it complies with all the demands set by the norm. The user is obligated to adhere to the Instruction manual.

EXCEPTIONS

Exceptions are parts subject to wear such as cast grate, seals and glass panes.

Glass panes (breakage of glass because of external hazard, changes on the surface due to thermal influences such as fly-ash or soot at the surface of the glass).

Discolouring of paint due to overload of thermal strain.

Seals (e.g. hardening or breakage due to thermal or mechanical strain).

Surface coatings (frequent cleaning or cleaning with abrasive cleaning agents).

Castings and parts which are subject to high thermal stress such as firebox grate.

REPAIRS

Possible repairs within the warranty will be executed within 30 days from the date of product delivery to the manufacturer. Should the repairs not be executed within 30 days from the delivery to the manufacturer, the product will be replaced with a new one. The manufacturer will notify the client about the executed repairs. The client is obligated to take over the product within 5 days from the repair completion.

COSTS

The manufacturer does not defray any delivery and return costs.

Prior to commencement of repairs within the warranty (for damages caused by incorrect use, fireplace transport and mounting), the manufacturer will notify the client about the repair price in written form. Once the client agrees, the manufacturer will execute the repairs and charge the client for the repairs.

Manufacturer shall not bear any responsibility for servicing costs that may be the result of fireplace lining installation or disassemble and central heating system mounting or disassemble during the warranty period and after that period. The manufacturer shall not be responsible for service transportation costs during the warranty period and after that period.

SPARE PARTS

Original parts replaced within the warranty do not have to match the removed parts in external physical appearance, but they must match them in quality and functionality.

DISCLAIMER OF LIABILITY

Manufacturer cannot accept any liability for the loss or the damage of an appliance through theft, fire, vandalism or similar causes. Indirect or direct damage caused to the product, which is the result of improper transportation of the product, are excluded from the liability. We cannot accept any liability for damages caused by chemical or electrochemical effects (e.g. pollutants in the combustion air, water scale and similar) which are the result of improper installation of the product and violation of this Instruction manual.

The warranty is void if the user made alterations to the product without manufacturer's prior knowledge.

The warranty is valid if the installation was executed by an authorized professional and upon presenting the written installation report.

Possible disputes to be settled by the Court in Čakovec.

The manufacturer SENKO d.o.o. withholds the right to alter any technical details, data and photographs published in this booklet without prior warning, for the purpose of improving its products. Photographs of the fireplace, parts, elements and equipment published in this booklet can be different from the actual items.

WARRANTY No. ☐

SOLID FUEL CENTRAL HEATING FIREPLACE :

☐ **E2284 Central 20-25 kW** ☐ **E2285 Central 30-35 kW**

SERIAL NUMBER: _____

DATE OF MANUFACTURE: _____

STORE NAME AND ADDRESS: _____

_____

CLIENT NAME AND ADDRESS: _____

_____

DATE OF PURCHASE: _____

STORE STAMP AND DEALER SIGNATURE: _____

Complaints within warranty – product information :

Faulty product date of receipt : _____	Faulty product date of receipt : _____
Malfunction description (client) : _____	Malfunction description (client) : _____
Servicing agency comments : _____	Servicing agency comments : _____
Servicing completed on date : _____	Servicing completed on date : _____
Stamp and servicing technician signature : _____	Stamp and servicing technician signature : _____

COMPLETED BY THE CHIMNEY-SWEEPER

Chimney connection executed by the company :

Company/Business: _____ Person in charge: _____
stamp and signature

Street: _____ City: _____

Telephone: _____ Country: _____

Date: _____ Client signature: _____

Chimney
Type: …….
Dimensions (mm): …….
Height (m): ……..
Draught (Pa): …….
Flue gases exit temperature (°C): ……
Last inspection date: ……
Number of connections: ……..

Smoke venting pipe (if connected)
Cross-section (mm): ……
Length (m): ……
Number of elbows: ……....

COMPLETED BY THE CENTRAL HEATING INSTALLATION CONTRACTOR

Central heating system connection executed by the company :

Company/Business: _____ Person in charge: _____
stamp and signature

Street: _____ City: _____

Telephone: _____ Country: _____

Date: _____ Client signature: _____

Open system ☐ yes ☐ no
Closed system ☐ yes ☐ no
Connection execute in accordance with DIN 4751 ☐ yes ☐ no
Heated space volume (m^3): ……
Expansion tank volume (m^3): ……
Pump type: …….. Water flow (m^3/h): ……
Safety valve type: …….. Safety valve approved at …….bar
Water temperature (°C) ⇒ inlet: ……. ⇒ outlet: .....

CE		
Senko d.o.o. Vladimira Nazora 22, Štefanec 40 000 Čakovec, Republic of Croatia **12**		
EN 13229:2001 / A2:2004 / AC:2007		
Solid fuel central heating fireplaces		
	Central 20-25 kW	**Central 30-35 kW**
Minimum distance from flammable surfaces :	front 80 cm rear 20 cm sidebar 20 cm	
CO emission in flue gases (at 13% O_2) :	0,3 %	0,2 %
Maximum operational water pressure :	3 bar	
Flue gases temperature :	310 °C	370 °C
Heat output – water :	20 kW	31 kW
Heat output – space :	5 kW	4 kW
Efficiency :	80 %	69 %
Fuel type :	wood, wood briquettes	
Fuel consumption :	9 kg/h	10,5 kg/h
Certificate No :	E-30-00436-12	
Read and follow the Instruction manual. Use only recommended fuel. **Manufactured in the Republic of Croatia.**		

DECLARATION OF CONFORMITY

This product is certified in accordance with the EN 13229. Test report number 30-11665/5 from June 29th, 2012.

The original product Certificate and Declaration of Conformity available upon request.

NOTES :

SENKO
cookers and fireplaces

Vladimira Nazora 22 • Štefanec

40000 ČAKOVEC - Croatia

Tel: +385 (0)40 337 344 • Fax: +385 (0)40 337 906

E-Mail: info@senko.hr

… THE SPIRIT OF TRADITION

IN MODERN FORMS FOR

A HEALTHY ENVIRONMENT.

You can find this Manual at http://en.senko.hr/

If you have any suggestions on how to improve this Manual or you have noticed any deficiency, feel free to contact us on tehnologija@senko.hr